ES	SPAIN

Diagram / Parts List

6413

Drill

2026/01

(ES) 6413 / Drill

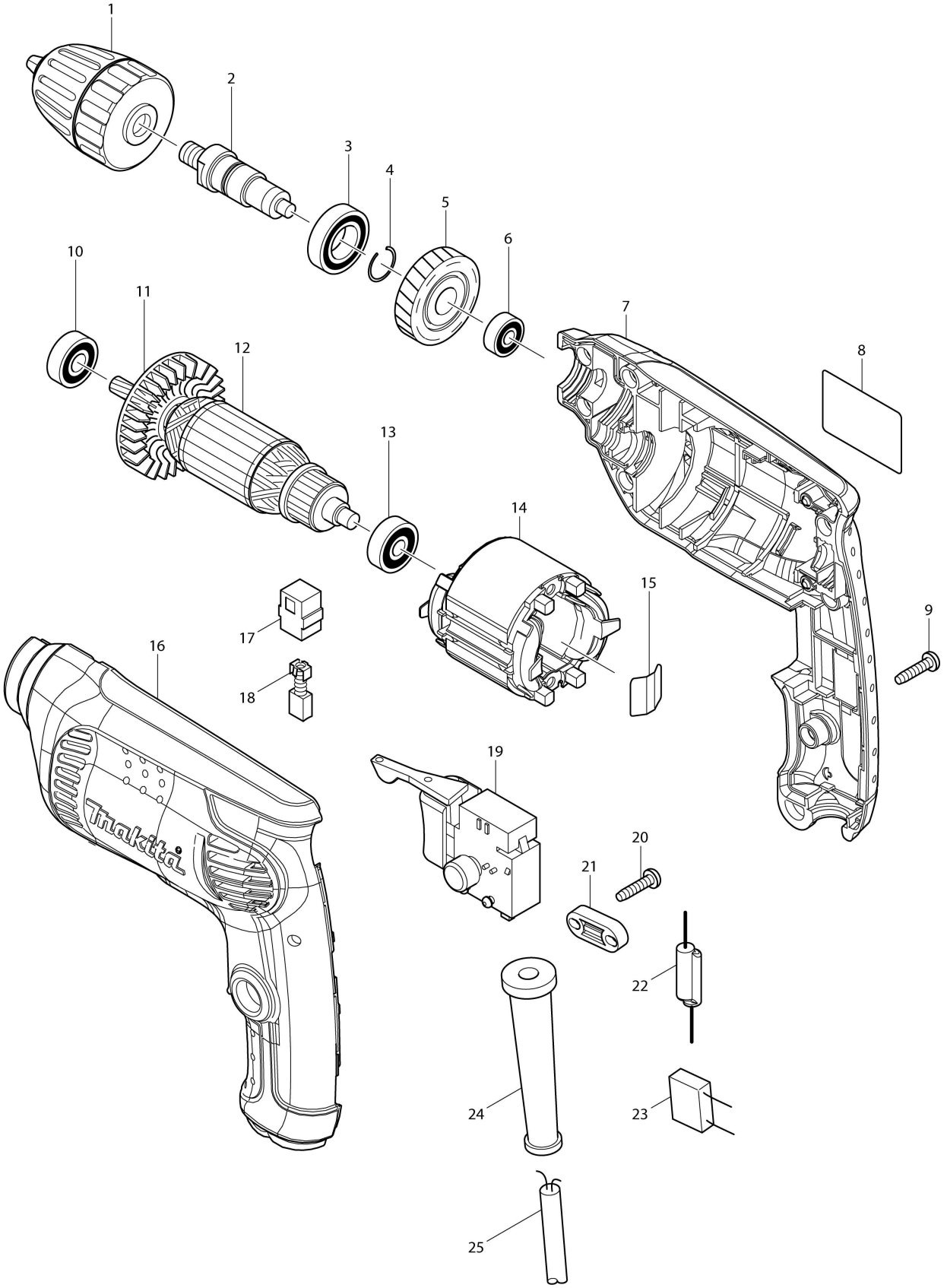

ES	SPAIN

6413 / Drill

Item	Sub	Parts No.	Parts Description	Qty	I/C	E/C No.	Close No.	Remark
001		763180-0	Keyless drill chuck 10	1			B4397	
001-1		763242-4	Keyless drill chuck 10	1	<	B4397		
002		324376-4	Spindle	1				
003		211242-3	Ball bearing 6902ZZ	1				
004		233925-5	Ring spring 13	1				
005		226578-7	Helical gear 35	1				
006		210028-2	Ball bearing 606ZZ	1				
007		188277-8	Housing set	1				
	C10	263002-9	Rubber pin 4	2				
	D10		INC. 16					
008		863402-9	Name plate 6413	1		94702		
009		266326-2	Binding head tapping screw 4X18	7				
010		211032-4	Ball bearing 608ZZ	1			C7229	
010-1		210191-1	Ball bearing 608ZZ	1	O	C7229		
011		240066-0	Fan 52	1				
012		515699-3	Armature assembly 240V	1			C7229	
	D10		INC. 10,11,13				C7229	
012-1		510434-4	Armature assembly 240V	1	O	C7229		
	D10		INC. 10,11,13			C7229		
013		210030-5	Ball bearing 627ZZ	1				
014		599369-2	Field assembly 240V	1			DV523	
	C10	654037-5	Insulated terminal FVWS1.25-M3	1			Y06150	Y04979
	C11	654037-5	Insulated terminal FVWS1.25-M3	1	O	Y06150	DF755	Y04979
	C12	654409-4	Insulated terminal VR1.25-3.5LB	1	O	DF755	DV523	Y04979
	C11	654037-5	Insulated terminal FVWS1.25-M3	1			DF755	
	C12	654409-4	Insulated terminal VR1.25-3.5LB	1	O	DF755	DV523	
014-1		599369-2	Field assembly 240V	1	O	DV523		
	C12	654409-4	Insulated terminal VR1.25-3.5LB	1	O	DV523		Y04979
	C12	654409-4	Insulated terminal VR1.25-3.5LB	1	O	DV523		
015		232210-3	Leaf spring	1				
016		188277-8	Housing set	1				
	C10	263002-9	Rubber pin 4	2				
	D10		INC. 7					
017A		643563-9	Brush holder 5X8	2			99619	
017-1A		643566-3	Brush holder 5X8	2	O	99619		
017-1B		643566-3	Brush holder 5X8	2				
018		191627-8	Carbon brush set CB-64	1			DW096	
018-1		194968-1	Carbon brush set CB-64	1	O	DW096		
019		650586-0	Switch DGQ-1104H	1				
020		266326-2	Binding head tapping screw 4X18	2				
021		687124-5	Strain relief	1				
022		646151-1	Choke coil	1				
023		645190-8	Noise suppressor	1				
024		682569-2	Cord guard 8-85	1				
025		665383-1	Power supply cord 1.0-2-2.0	1				
A01B		821549-5	Connector plastic case (type 1)	1				
	C10	453974-8	Latch	4				
A02B		838030-9	Inner tray	1				
A03B		805B64-9	Indication label 6413J	1				
A04B		805B65-7	Plastic case label 6413J	2				

A:6413(H)
B:6413J(H)

Interchange
O : Yes
X : No
< : the new part can be substituted for the current.
> : the current part can be substituted for the new.
S : Interchangeable as a set.